Technical Data Sheet

Product range: NEO

Product code: NE1009BRZ - NE3009BBR - NE7009BBL - NE4009CH

Finishes Available: Brushed Bronze, Brushed Brass, Brushed Black, Chrome

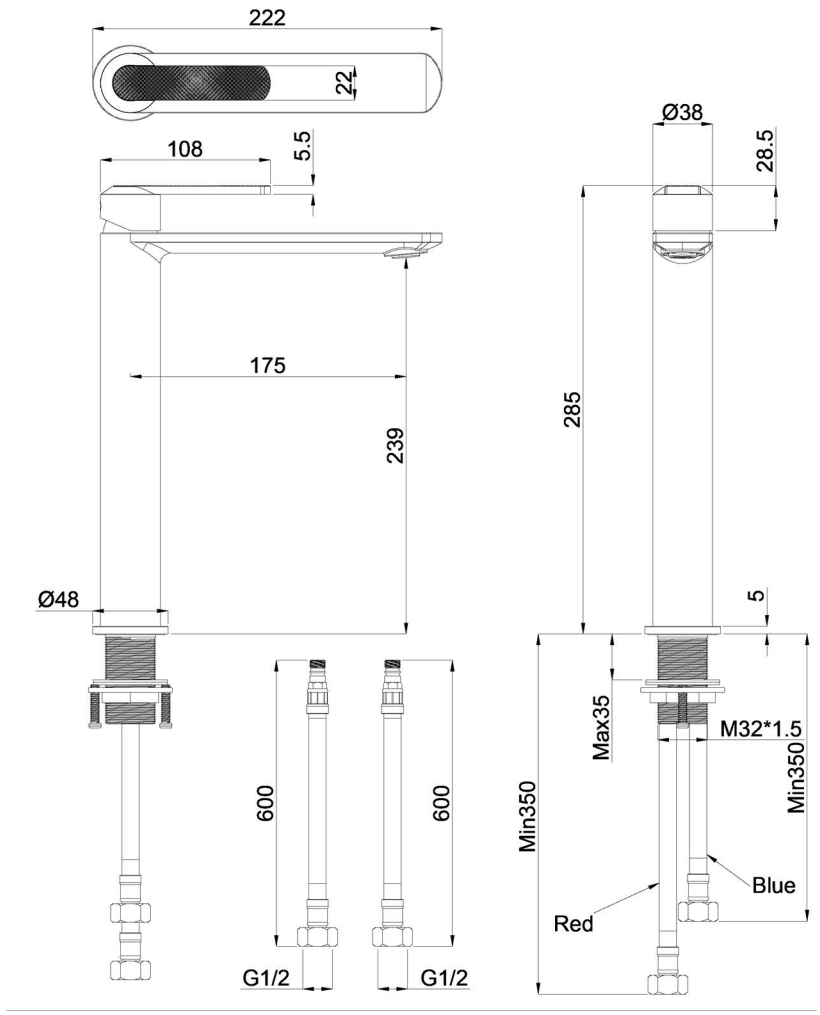

Min Pressure:
MP 0.5

Approvals:
N/A

Connections:
G 1/2"

Warranty:
15 Years (5 on cartridges)

Flow Rate

1Bar: 6L/min

2Bar: 8.8L/min

3Bar: 10.9L/min