Justtapsplus Jtp

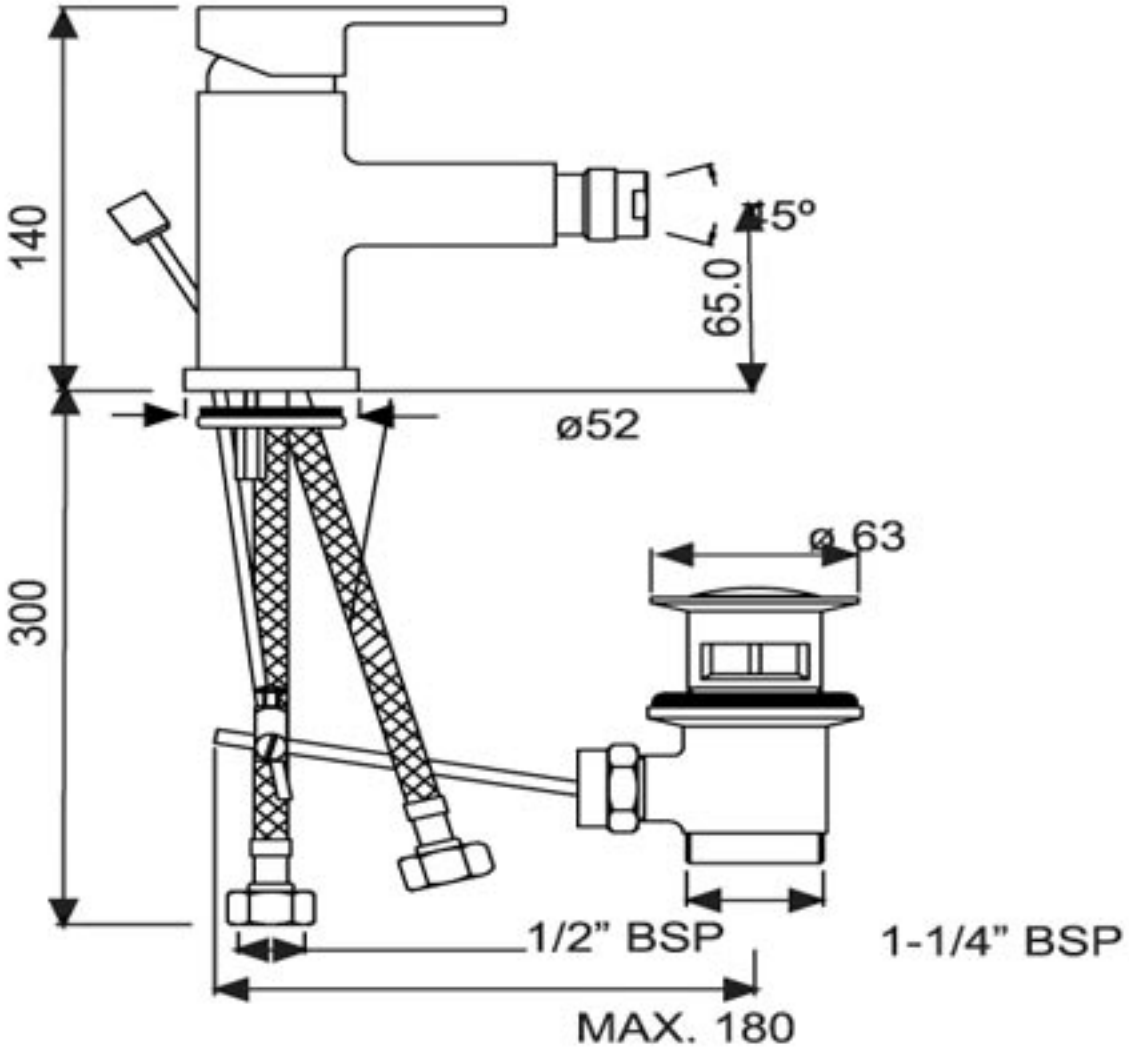

29213
Fusion
Fusion single lever bidet mixer with pop up waste, LP 0.2