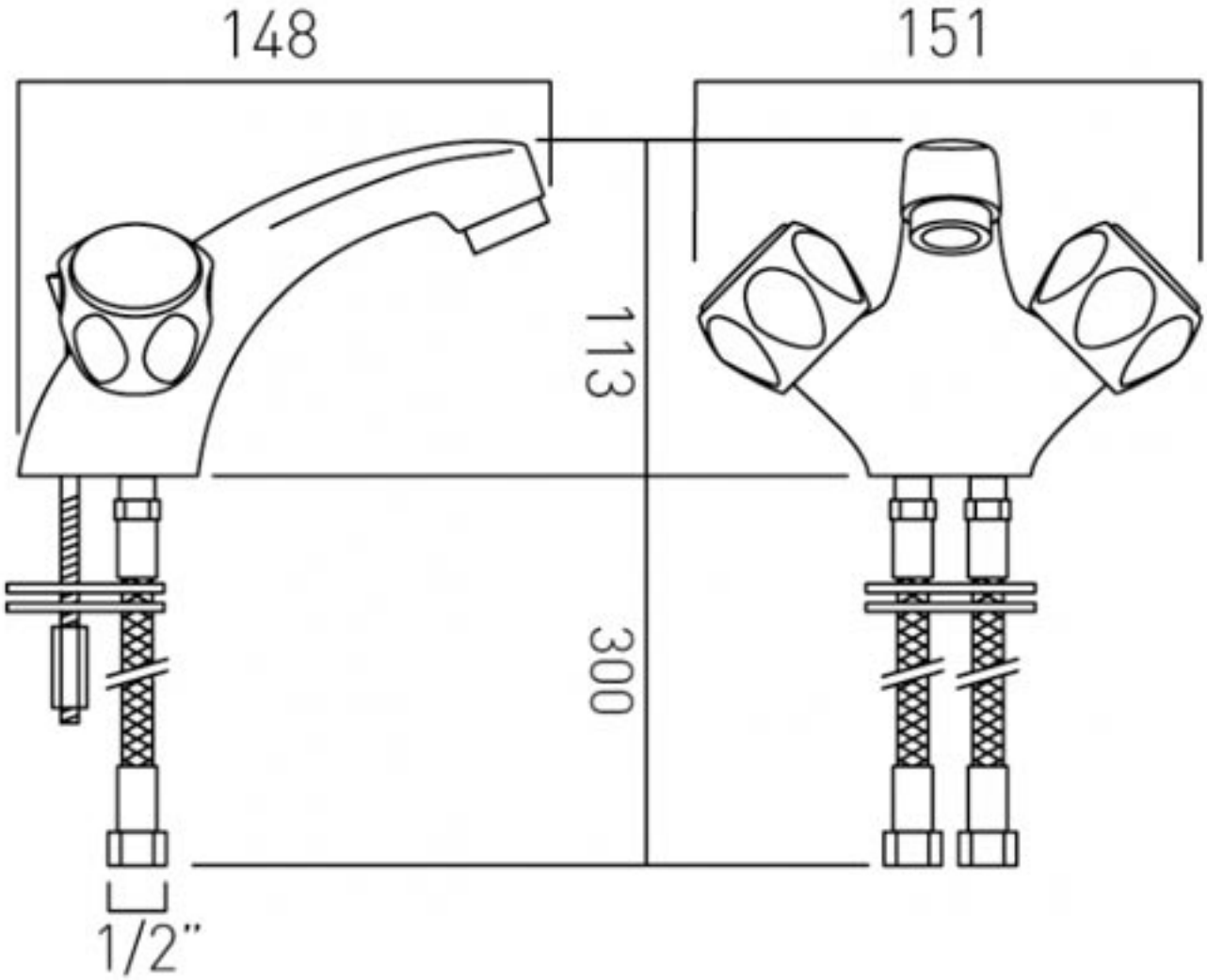

3169-C
Astra-C
Astra-C mono basin mixer with pop up waste, LP 0.2