Technical Data Sheet

Product range: FLORENCE

Product code: 55277

Finishes Available: Chrome

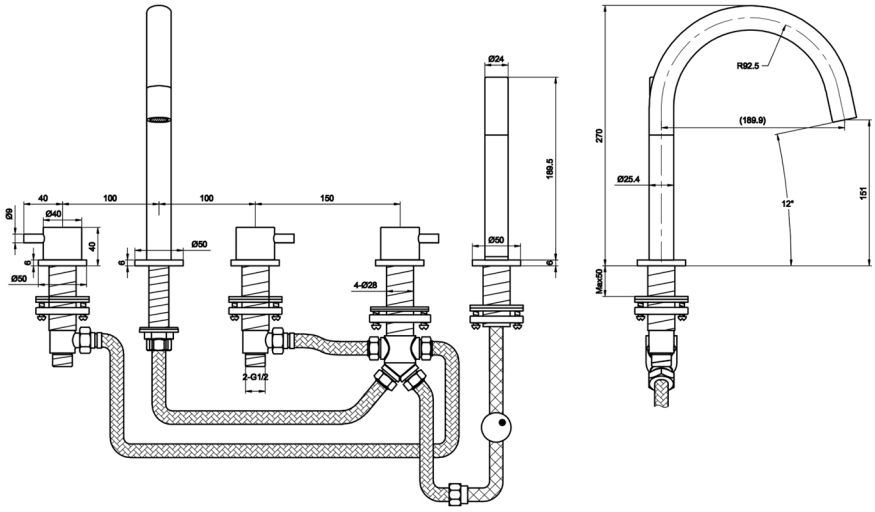

Min Pressure:
HP1

Approvals:
N/A

Connections:
G 1/2"

Warranty:
15 Years (5 on cartriges)

Flow Rate
Shower
0.5Bar: 5L/min
1Bar: 8L/min
2Bar: 11.9L/min
3Bar: 14.2L/min

Flow Rate
Bath
0.5Bar: 8L/min
1Bar: 11L/min
2Bar: 14.3L/min
3Bar: 17.5L/min