Technical Data Sheet

Product range: EVO

Product code: 66275, 66275MB, 66275BBR

Finishes Available: Matt Black, Brushed Brass, Brushed Black, Chrome

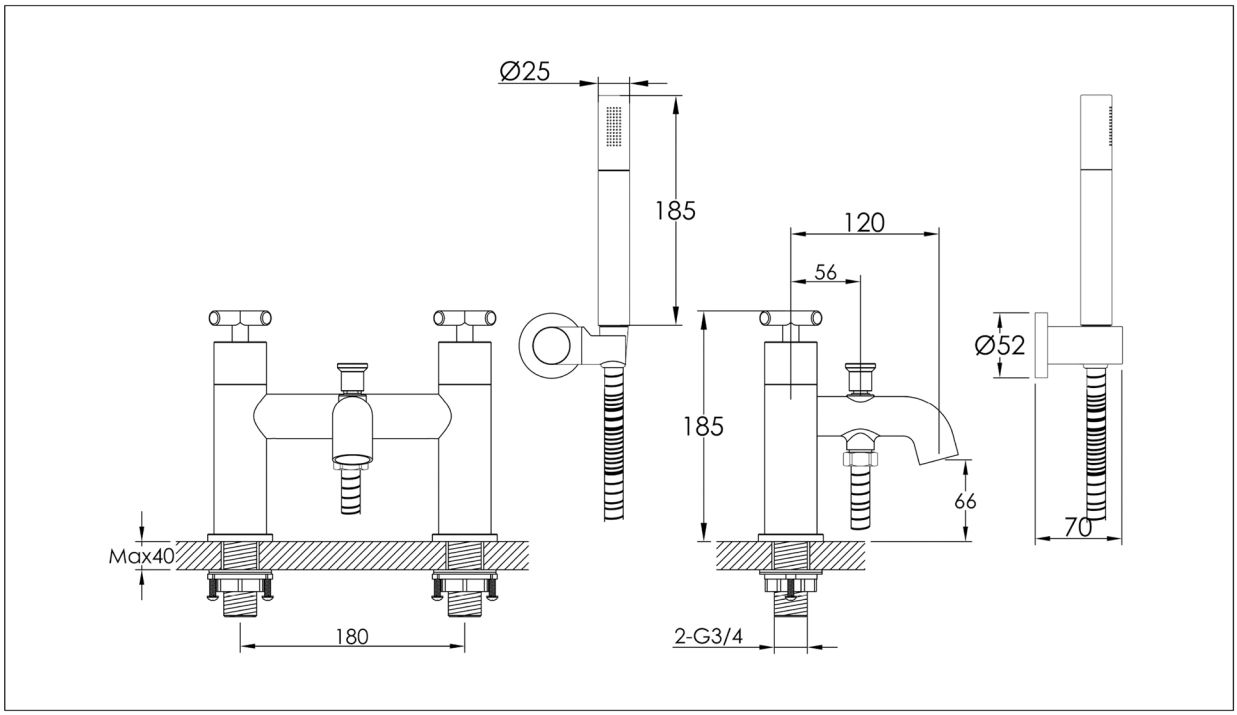

Min Pressure:
MP 0.5

Approvals:
N/A

Connections:
G3/4"

Warranty:
15 Years (5 on cartriges)

Flow Rate
Bath
0.5Bar: 8L/min
1Bar: 11L/min
2Bar: 14.3L/min
3Bar: 17.8L/min

Flow Rate
Shower
0.5Bar: 5L/min
1Bar: 8L/min
2Bar: 11.9L/min
3Bar: 14.1L/min