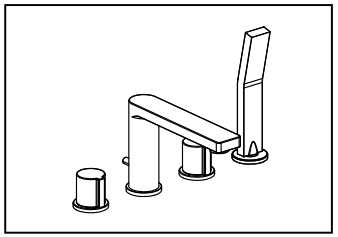

HUGO 4-HOLE DECK MOUNTED
BATH/SHOWER MIXER

Coordinated Bathrooms Designed For You

Installation Steps

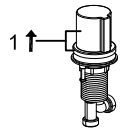

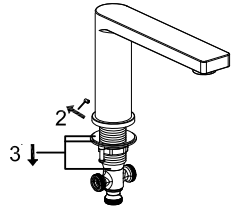

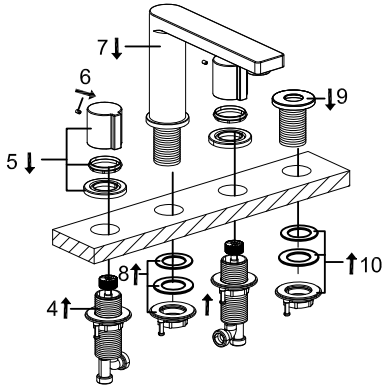

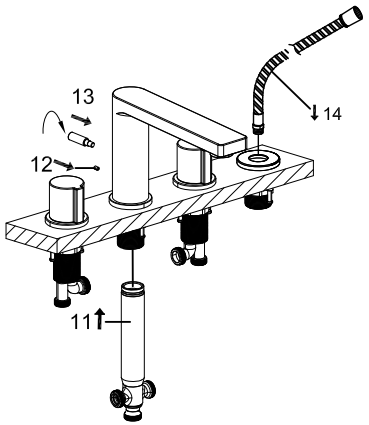

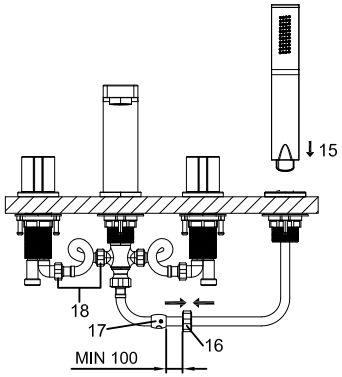

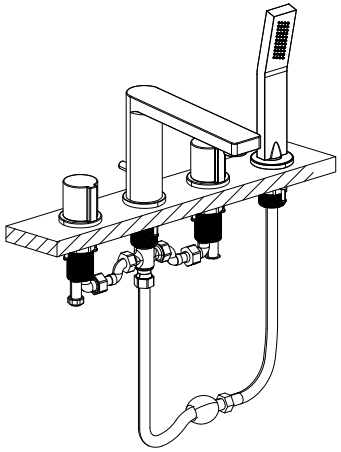

Dimension Drawing

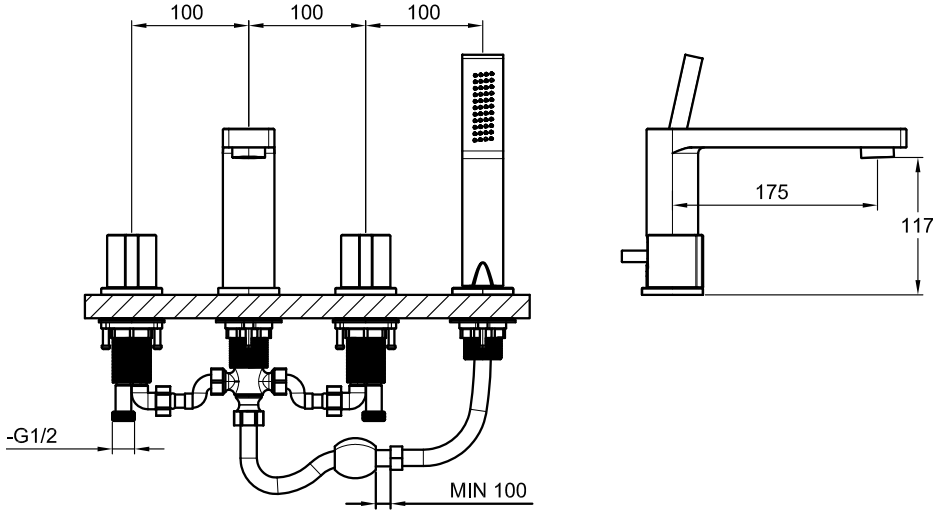
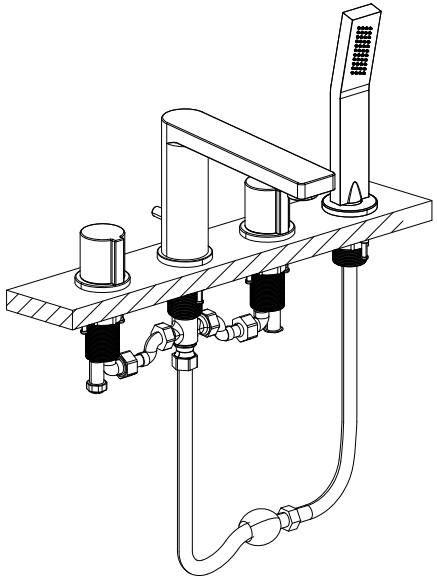
Explosive drawing