Technical Data Sheet

Product range: GROSVENOR

Product code: GRO963CW

Finishes Available: Chrome

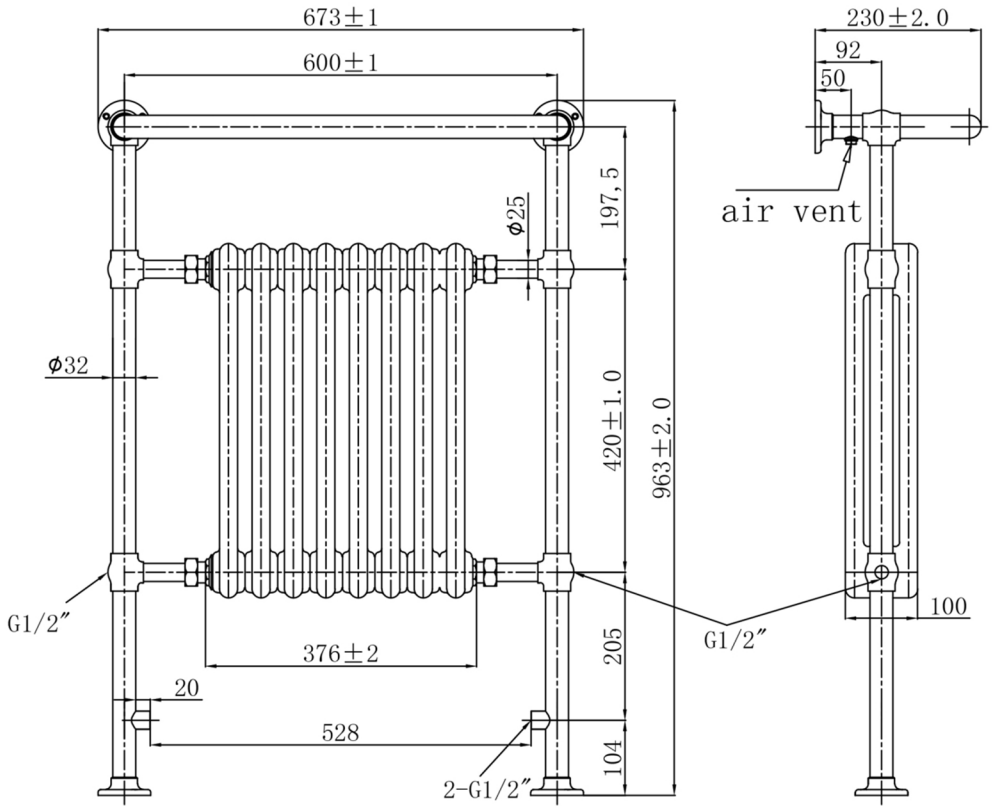

Size	Bars	BTU	Pipe Centre	Projection	Recommended Element	Finish
963x673x230	8	3410	438	230	600W	Steel Chrome