Technical Data Sheet

Product range: INOX

Product code: IX193

Finishes Available: Stainless Steel

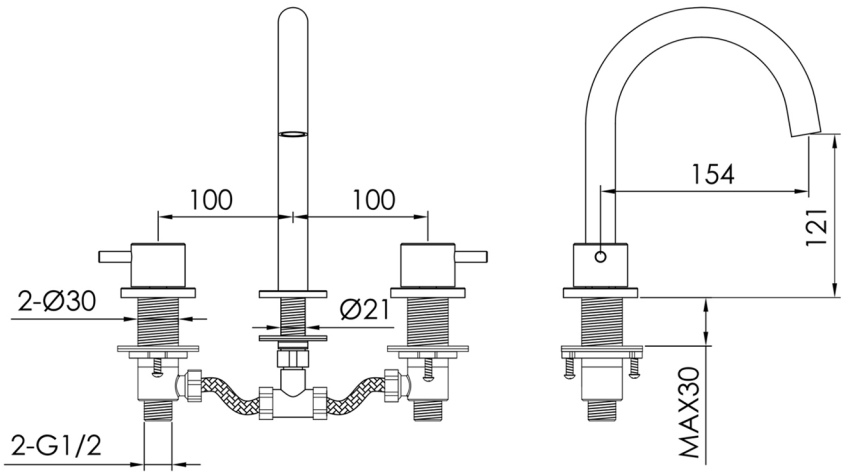

Min Pressure:
HP 1

Approvals:
KIWA

Connections:
G 1/2"

Warranty:
15 Years (5 on cartriges)

Flow Rate