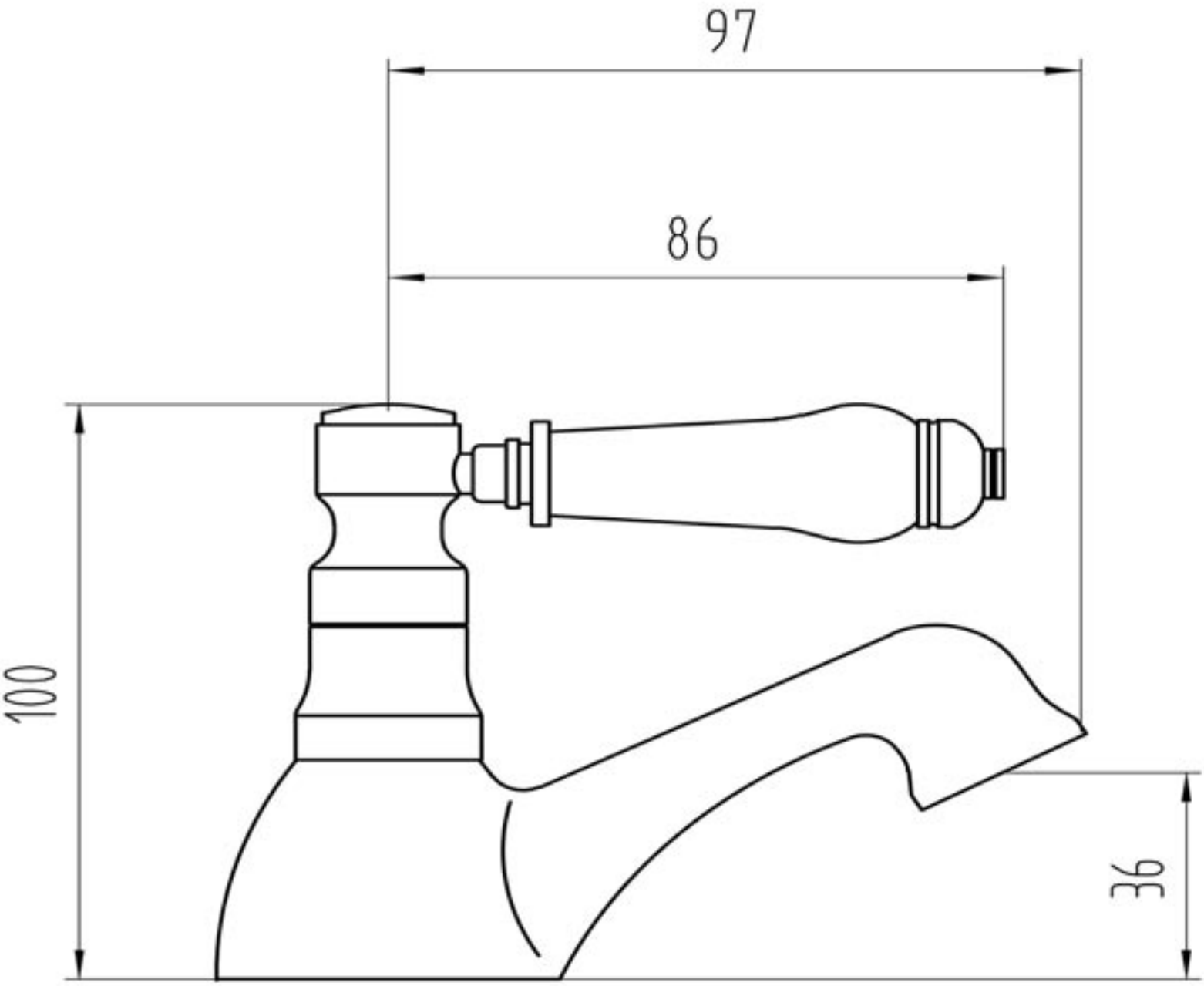

JTSN306P
Sapphire
Sapphire bath taps, LP 0.2