Technical Drawing

Product code: **27693ABBL**
Product range: **VOS Brushed Black**

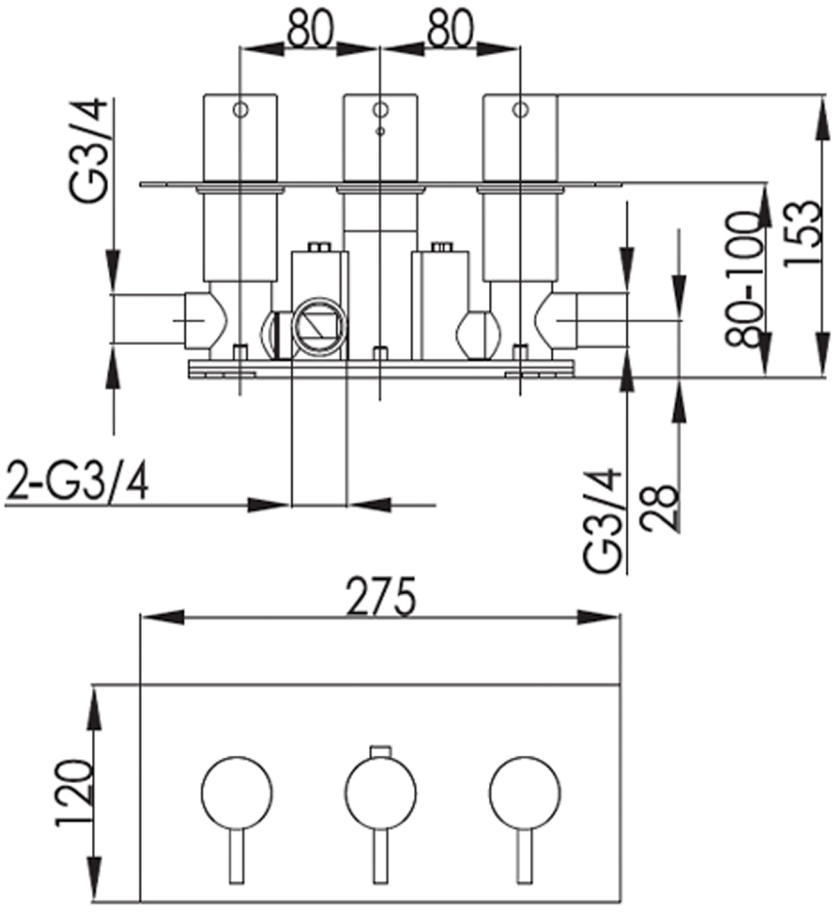

www.justtapsplus.co.uk
technical@jtpuk.co.uk
01895 442211